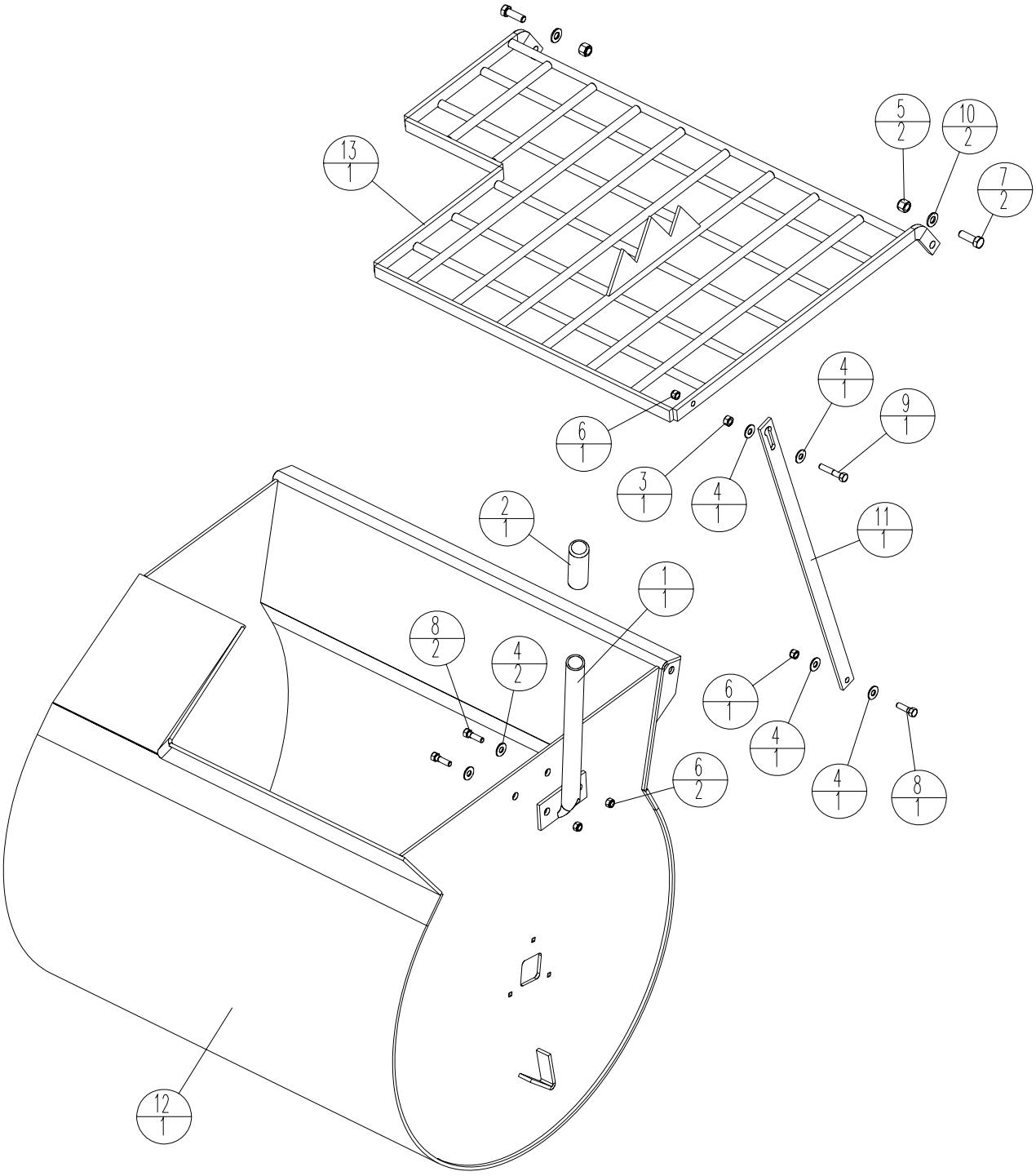
13
1
5
2
10
2
7
2
6
1
3
1
4
1
4
1
9
1
11
1
2
1
1
1
8
2
4
2
6
1
4
1
4
1
8
1
6
2
12
1

DRUM / DRUM GUARD / GUARD LIFTER ASSEMBLY

Item	Part No.	Qty	Description
1	24763-2	1	Weld Handle Dump
2	47023	1	Grip Hand
3	80042	1	Nut NUTFX 3/8-16 ZN
4	80043	6	Washer WSHR WROT 3/8 ZN
5	80051	2	Nut NUTNY ½-13 ZN
6	80056	4	Nut NUTNY 3/8-16 ZN
7*	80075	2	Screw HHCS ½-13 x 1-1/2 GR5 ZN
8*	80145	3	Screw HHCS 3/8-16 x 1-1/4 GR5 ZN
9*	80178	1	Screw 3/8-16 x 2 GR5 ZN
10	80343	2	Washer WSHR SAE ½ ZN
11	57066BD-2	1	Guard Lifter Extreme Duty
12	57645BD-2	1	Weld Drum Extreme Duty 1300
13	57652BD-2	1	Weld Guard Drum Extreme Duty 1300
14^	57728BD	1	Kit Drum Paddle Assy EXD1300

NOTE: If your mixer has a WELDED ON bearing housing you must purchase this bearing kit version: ST22153
The ST23432 featured here is for the BOLT on version ONLY.

* Loctite 262
^ Not shown