Hub Assembly No. 125-8171

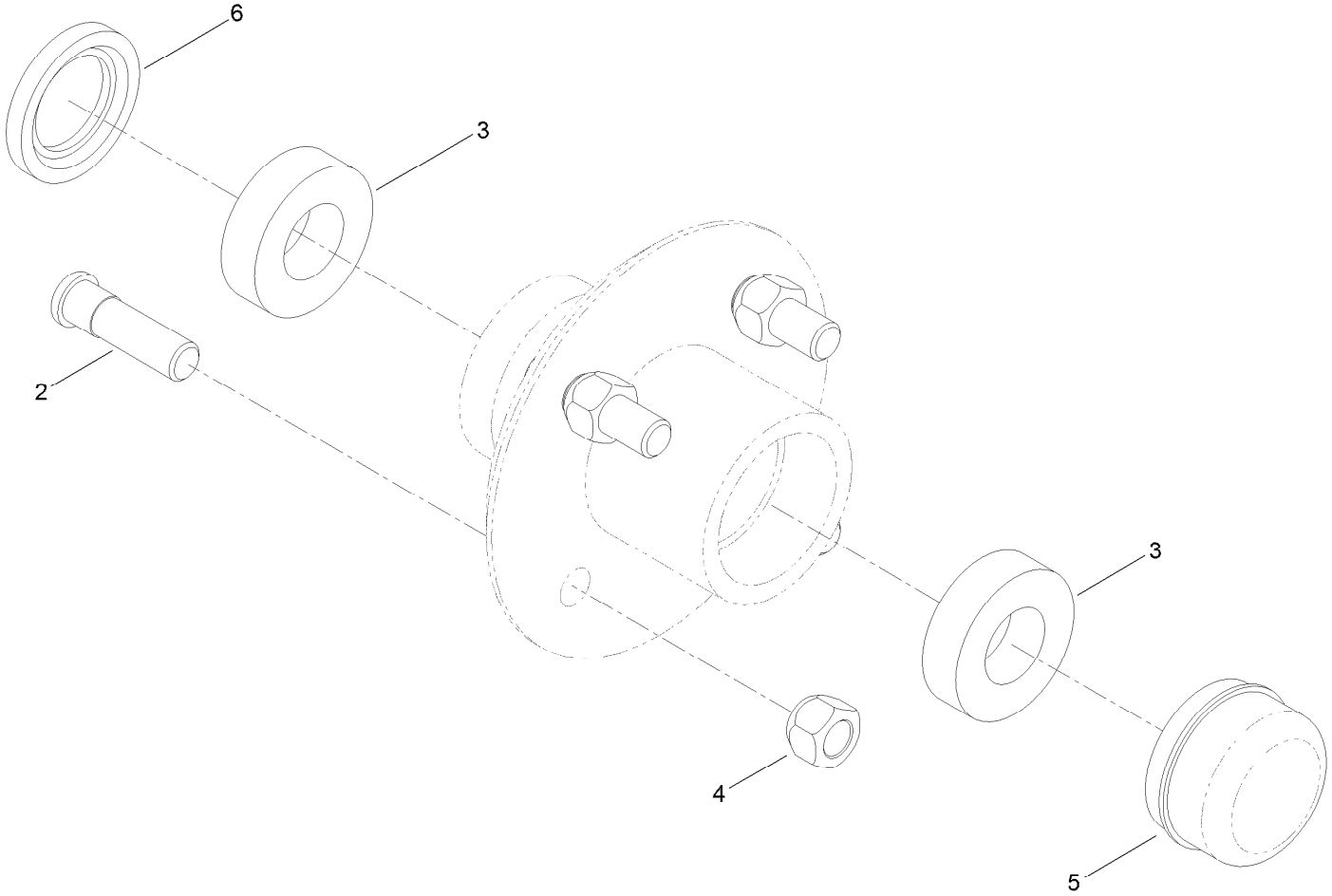

Hub Assembly No. 125-8171 (continued)

Ref.	Part Number	Qty.	Description
2	ST39190	4	Stud-Wheel
3	ST32233	2	Bearing-Roller
4	ST80045	4	Nut-Lug
5	ST34573	1	Cap-Dust
6	ST32052	1	Seal-Hub, Wheel