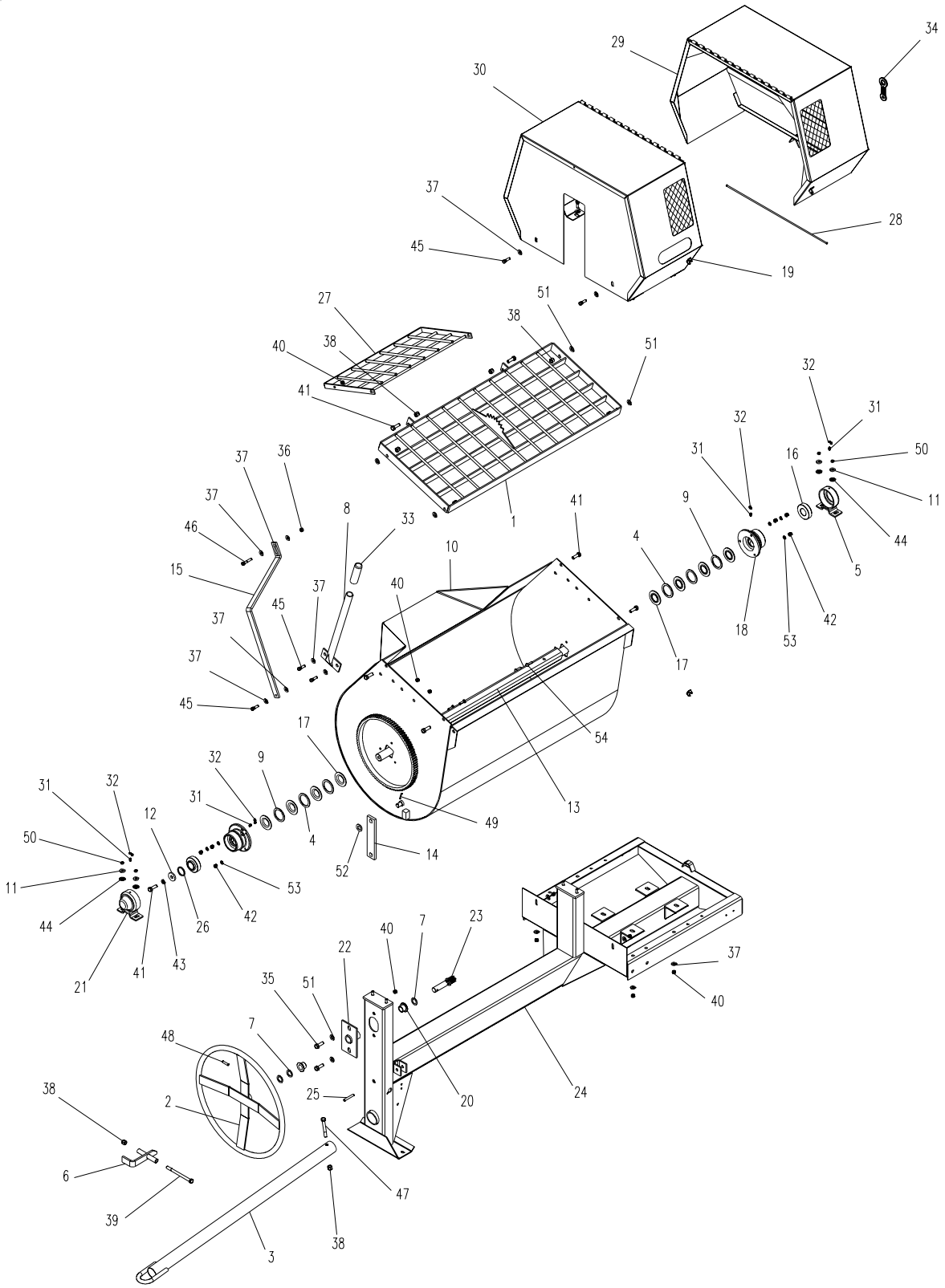
34
29
30
37
28
45
19
27
51
38
51
40
38
32
41
31
32
37
36
31
16
50
37
8
9
11
46
33
41
4
44
10
15
37
40
5
45
18
42
37
53
37
17
45
17
54
32
9
31
32
31
12
13
49
50
4
14
52
11
53
44
26
42
23
40
7
41
43
22
37
21
35
51
40
7
48
20
24
38
2
25
6
47
39
38
3

FRAME AND DRUM ASSEMBLY 1265/1285/1650PM

CONJUNTO DE BASTIDOR Y TAMBOR 1265/1285/1650PM
CHASSIS ET TAMBOUR 1265/1285/1650PM
GRUPPO TELAIO E TAMBURO 1265/1285/1650PM

Item	Part No.	Qty	Description	Descripción	Description	Descrizione
1	22023-2	1	Guard Stationary 1265PM / 1285PM	Protector fijo	Protection fixe	Protezione fissa
1a	22021-2	1	Guard Stationary 1650PM	Protector fijo	Protection fixe	Protezione fissa
2	22096-2	1	Handwheel 1650PM	Volante	Volant	Volantino
3	22097-2	1	Tow Pole Standard 47 inch	Barra de remolque estándar 47 in.	Barre de remorquage standard 47 inches	Asta di traino standard da 47 in
4	24017	4	Seal Spacer	Sello espaciador	Pièce d'écartement de joint	Guarnizione distanziatore
5	24021-2	1	Trunnion EE	Muñón EE	Tourillon EE	Perno articolazione EE
6	24027-2	1	Latch Drum 1265PM / 1285PM	Pestillo de tambor	Loquet de tambour	Chiusura tamburo
7	24622	1	Washer - WSHR 1-1/32 x 1-1/2 x 1/8 1650PM	Arandela	Rondelle	Rondella
8	22856	1	Dump Handle 1265PM / 1285PM	Manija de descarga	Poignée de décharge	Stegola di scarico
9	25881	2	Washer Split	Arandela dividida	Rondelle fendue	Rondella con taglio
10	37575-2	1	Drum 1265PM / 1285PM	Tambor 1265PM / 1285PM	Tambour 1265PM / 1285PM	Tamburo 1265PM/1285PM
10a	25895-2	1	Drum 1650PM	Tambor 1650PM	Tambour 1650PM	Tamburo 1650PM
11	26325	4	Washer - WSHR .375 ID x 1.00 OD x .187 ZN	Arandela	Rondelle	Rondella
12	26326	1	Washer WSHR 9/16 x 1-3/4 x 1/4	Arandela	Rondelle	Rondella
13	22342	1	Kit Paddle Shaft 1265PM	Juego de eje de paletas 1265PM	Kit d'arbre à palettes 1265PM	Kit paletta albero 1265PM
13a	22345	1	Kit Paddle Shaft 1285PM	Juego de eje de paletas 1285PM	Kit d'arbre à palettes 1285PM	Kit paletta albero 1285PM
13b	22348	1	Kit Paddle Shaft 1650PM	Juego de eje de paletas 1650PM	Kit d'arbre à palettes 1650PM	Kit paletta albero 1650PM
14	28151-2	1	Stop Back Dump 1650PM	Tope trasero de descarga 1650PM	Butée de décharge arrière 1650PM	Arresto scarico posteriore 1650PM
15	32733-2	1	Lifter Guard 1265PM / 1285PM	Elevador de protector 1265PM / 1285PM	Poussoir de protection 1265PM / 1285PM	Sollevatore protezione 1265PM/1285PM
15a	32734-2	1	Lifter Guard 1650PM	Elevador de protector 1650PM	Poussoir de protection 1650PM	Sollevatore protezione 1650PM
16	32003	2	Bearing	Cojinete	Roulement	Cuscinetto
17	32324	8	Drum Seal Yellow	Sello de tambor amarillo	Joint de tambour jaune	Guarnizione gialla tamburo
18	32326-2	2	Housing Bearing Machined	Caja de cojinete rectificada	Logement de roulement usiné	Alloggiamento cuscinetto lavorato a macchina
19	35289	2	Latch Flex Draw	Pestillo de tracción flexible	Loquet mobile souple	Dispositivo chiusura flessibile
20	35297	2	Bearing Oil Lite 1650PM	Cojinete, aceite liviano 1650PM	Témoin d'huile de roulement 1650PM	Paraolio leggero cuscinetto 1650PM
21	36574-2	1	Weld Trunnion Capped TPE	Muñón soldado con tapa, TPE	Tourillon soudé protégé TPE	Saldatura perno articolazione sigillato TPE

NOTE: If your mixer has a WELDED ON bearing housing you must purchase this bearing kit version: ST22153
The ST23432 featured here is for the BOLT on version ONLY.

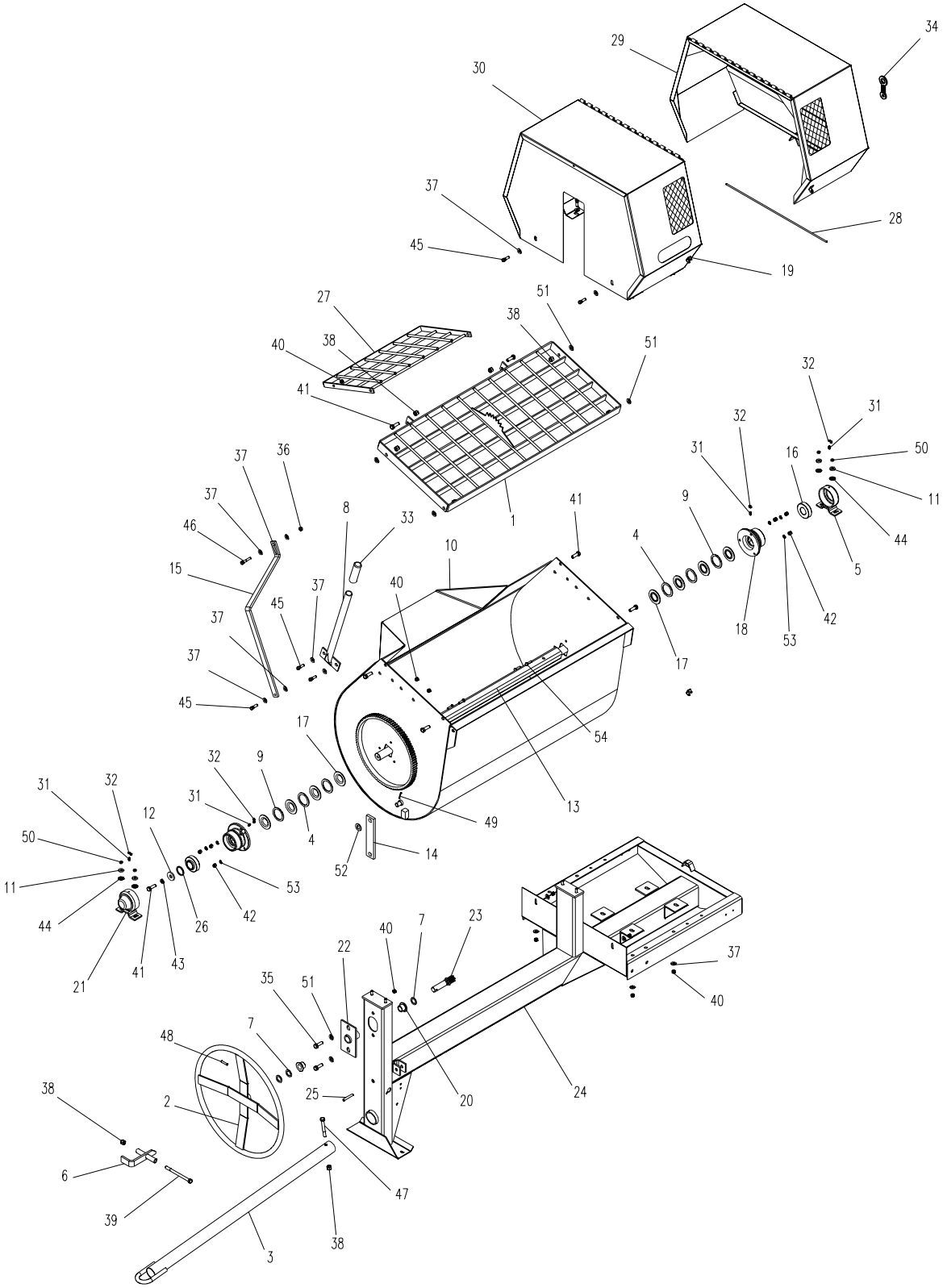
29
34
30
37
28
45
19
27
51
38
51
40
38
32
41
31
32
37
36
31
16
50
37
8
33
41
9
11
46
10
4
44
15
40
5
37
45
18
42
37
53
37
17
45
54
17
32
9
31
32
31
12
13
50
4
49
14
52
11
53
44
26
42
23
40
7
21
41
43
22
37
35
51
40
7
48
20
24
38
2
25
6
47
39
38
3

FRAME AND DRUM ASSEMBLY 1265/1285/1650PM

CONJUNTO DE BASTIDOR Y TAMBOR 1265/1285/1650PM
CHASSIS ET TAMBOUR 1265/1285/1650PM
GRUPPO TELAIO E TAMBURO 1265/1285/1650PM

Item	Part No.	Qty	Description	Descripción	Description	Descrizione
22	42616-2	1	Tilt Plate (1650PM)	Placa de inclinación (1650PM)	Plateau d'inclinaison (1650PM)	Piastra di inclinazione (1650PM)
23	42618	1	Assy Tilt Shaft 6T (1650PM)	Conj. eje de inclinación, 6T (1650PM)	Arbre d'inclinaison 6T (1650PM)	Gruppo albero di inclinazione (1650PM)
24	42804-2	1	Frame 1265PM	Bastidor 1265PM	Châssis 1265PM	Telaio 1265PM
24a	22218-2	1	Frame 1285PM	Bastidor 1285PM	Châssis 1285PM	Telaio 1285PM
24b	42679-2	1	Frame 1650PM	Bastidor 1650PM	Châssis 1650PM	Telaio 1650PM
25	44099	1	Snapper Pin ZN (1650PM)	Pasador elástico ZN (1650PM)	Goupille à enclenchement ZN (1650PM)	Spina elastica ZN (1650PM)
26	44284	1	Spacer Drum Shaft TPE	Espaciador de eje de tambor, TPE	Pièce d'écartement d'arbre de tambour TPE	Distanziatore albero tamburo TPE
27	23242	1	Guard Moveable	Protector móvil	Protection mobile	Protezione mobile
28	44372	1	Pin Hinge	Pasador de articulación	Axe charnière	Spina cerniera
29	44380-2	1	Cowl Assy Moveable	Conj. de capó móvil	Tablier mobile	Paratia cabina-cofano mobile
30	44371-2	1	Cowl Assy Stationary (1265PM)	Conj. de capó fijo (1265PM)	Tablier fixe (1265PM)	Paratia cabina-cofano fissa (1265PM)
30a	44381-2	1	Cowl Assy Stationary (1285PM/1650PM)	Conj. de capó fijo (1285PM/1650PM)	Tablier fixe (1285PM/1650PM)	Paratia cabina-cofano fissa (1285PM/1650PM)
31	46042	4	Fitting Grease	Grasera	Graisseur	Ingrassatore
32	47001	4	Caplug Blue	Tapa azul	Bouchon bleu	Tappo blu
33	47023	1	Grip Handle (1265PM/1285PM)	Empuñadura (1265PM/1285PM)	Poignée (1265PM/1285PM)	Impugnatura (1265PM/1285PM)
34	47182	1	Latch Cowl	Pestillo de capó	Loquet de tablier	Chiusura cofano
35	80031	2	Bolt HWHTB 1/2-13 x 1-1/2 (1650PM)	Perno	Boulon	Bullone
36	80042	1	Nut NUTFX 3/8-16 ZN	Tuerca	Écrou	Dado
37	80043	22	Washer WSHR 3/8 WROT ZN	Arandela	Rondelle	Rondella
38	80051	8	Nut NUTNY 1/2 - 13 ZN	Tuerca	Écrou	Dado
39	80052	1	Screw HHCS 1/2-13 x 6-1/2 ZN (1265PM/1285PM)	Tornillo	Vis	Vite
40	80056	10	Nut NUTNY 3/8 - 16 ZN	Tuerca	Écrou	Dado
41	80072	12	Screw HHCS 3/8-16 x 1-3/4 GR 5 ZN	Tornillo	Vis	Vite
42	80075	12	Screw HHCS 1/2 - 13 x 1-1/2 ZN	Tornillo	Vis	Vite
43	80117	1	Washer WSHRL 1/2 Med Split ZN	Arandela	Rondelle	Rondella
44	80119	4	Washer WSHRLT 3/8 ZN	Arandela	Rondelle	Rondella
45	80145	9	Screw HHCS 3/8-16 x 1 - 1/4 ZN	Tornillo	Vis	Vite

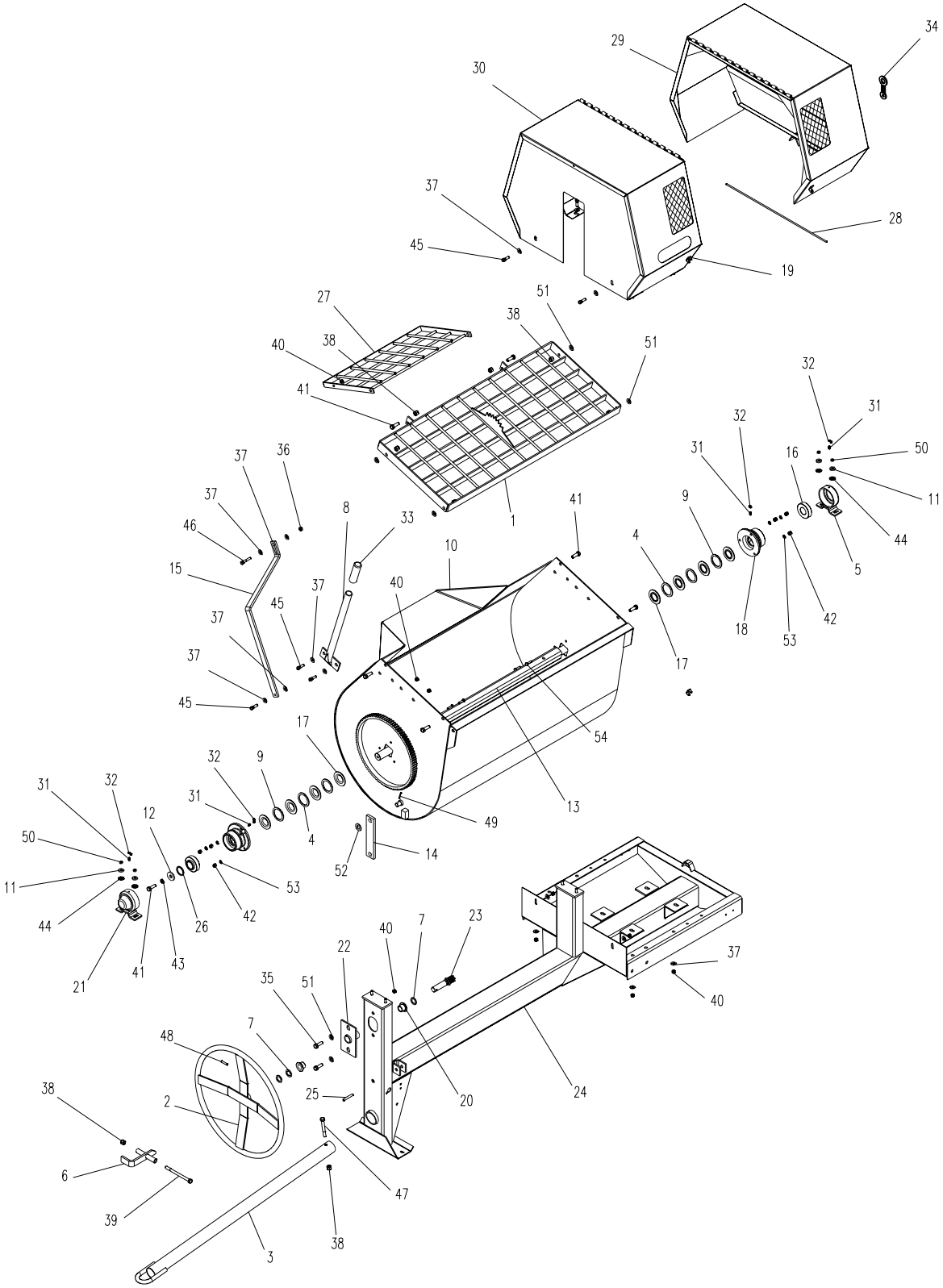
34
29
30
28
37
45
19
27
51
38
40
38
51
41
1
32
31
32
31
16
50
11
37
36
37
46
8
33
41
9
44
10
4
5
15
37
40
45
18
42
37
53
37
17
45
54
17
32
9
31
32
31
12
13
50
4
49
14
52
11
53
44
26
42
21
41
43
40
7
23
22
37
35
51
40
7
48
20
24
38
2
25
6
47
39
38
3

FRAME AND DRUM ASSEMBLY 1265/1285/1650PM

CONJUNTO DE BASTIDOR Y TAMBOR 1265/1285/1650PM
CHASSIS ET TAMBOUR 1265/1285/1650PM
GRUPPO TELAIO E TAMBURO 1265/1285/1650PM

Item	Part No.	Qty	Description	Descripción	Description	Descrizione
46	80178	1	Screw HHCS 3/8-16x2 GR5 ZN	Tornillo	Vis	Vite
47	80197	1	Screw HHCS 1/2 - 13 x 4 ZN	Tornillo	Vis	Vite
48	80309	1	Pin - PINSP 5/16 x 1-1/2 (1650PM)	Pasador	Goujon	Spina
49	80316	1	Pin - PINCT 1/8 x 1-1/2 ZN (1650PM)	Pasador	Goujon	Spina
50	80325	4	Nut NUTFL 3/8 - 16 ZN	Tuerca	Écrou	Dado
51	80343	6	Washer WSHR SAE 1/2 ZN	Arandela	Rondelle	Rondella
52	80344	1	Washer - WSHR 3/4 SAE ZN (1650PM)	Arandela	Rondelle	Rondella
53	80495	6	Washer WSHR 5/16 SAE ZN	Arandela	Rondelle	Rondella
54	81064	6	Bolt - CRBLT 5/16-18 x 1-1/4 ZN	Perno	Boulon	Bullone
55^	22130-2	1	Tow Pole Hitch (option)	Barra de remolque, enganche (opcional)	Barre de remorquage avec attelage (en option)	Sollevatore asta di traino (in opzione)
56^	22195-2	1	Tow Pole Ball Hitch (option)	Barra de remolque, enganche de bola (opcional)	Barre de remorquage avec boule d'attelage (en option)	Sollevatore a sfera asta di traino (in opzione)
57^	47294	1.5 ft	Trim Strip (1285PM/1650PM)	Tira decorativa (1285PM/1650PM)	Bande de garniture (1285PM/1650PM)	Striscia di rifinitura (1285PM/1650PM)
59^	23222	1	Cowl Kit Full 1265PM (includes items 28,29,30 & Decals)	Juego de capó completo 1265PM (incluye artículos 28, 29, 30 y etiquetas)	Kit de tablier complet 1265PM (comprend les éléments 28, 29, 30 et les autocollants)	Kit paratia cabina-cofano piena - 1265PM (include i componenti 28, 29, 30 e gli adesivi)
60^	23223	1	Cowl Kit Full 1285PM, 1650PM (includes 28,29,30, 57 & Decals)	Juego de capó completo 1285PM, 1650PM (incluye artículos 28, 29, 30, 57 y etiquetas)	Kit de tablier complet 1285PM, 1650PM (comprend 28, 29, 30, 57 et les autocollants)	Kit paratia cabina-cofano piena - 1285PM, 1650PM (include i componenti 28, 29, 30, 57 e gli adesivi)
61^	23224	1	Cowl Kit Moveable LgPM (includes 28,29 & Decals)	Juego de capó móvil LgPM (incluye artículos 28, 29 y etiquetas)	Kit de tablier mobile LgPM (comprend 28, 29 et les autocollants)	Kit paratia cabina-cofano mobile LgPM (include i componenti 28, 29 e gli adesivi)
62^	22126	1	Kit Safety Chain	Conjunto de cadena de seguridad	Kit de chaîne de sûreté	Kit catena di sicurezza
63^	23432	2	Kit Bearing Seal (includes 4,9,16,17) 2-sets req'd	Juego de sellos de cojinete (incluye artículos 4, 9, 16, 17), se requieren 2 juegos	Kit de joint de roulement (comprend 4, 9, 16, 17) - 2 jeux requis	Kit guarnizione cuscinetto (include i componenti 4, 9, 16, 17) sono richieste 2 serie
64^	23430	2	Kit Seal Spacer (includes 4, 9, 17) 2-sets req'd	Juego de sellos de cojinete (incluye artículos 4, 9, 17), se requieren 2 juegos	Kit de pièce d'écartement de joint (comprend 4, 9, 17) - 2 jeux requis	Kit guarnizione distanziatore (include i componenti 4, 9, 17) sono richieste 2 serie
65^	48251	10 in	.062 Diameter Wire Rope	Cable 0.062 diámetro	Câble métallique diamètre 0.062	Fune diam. 0.062
66^	48252	2	Crimping Collar for .062 Diameter	Collar de engarzado para cable de 0.062 diám.	Collier de sertissage pour diamètre 0.062	Collare per giuntare per diam. 0.062

^ Not Shown ^ No se ilustra ^ Non représenté ^ Non illustrato