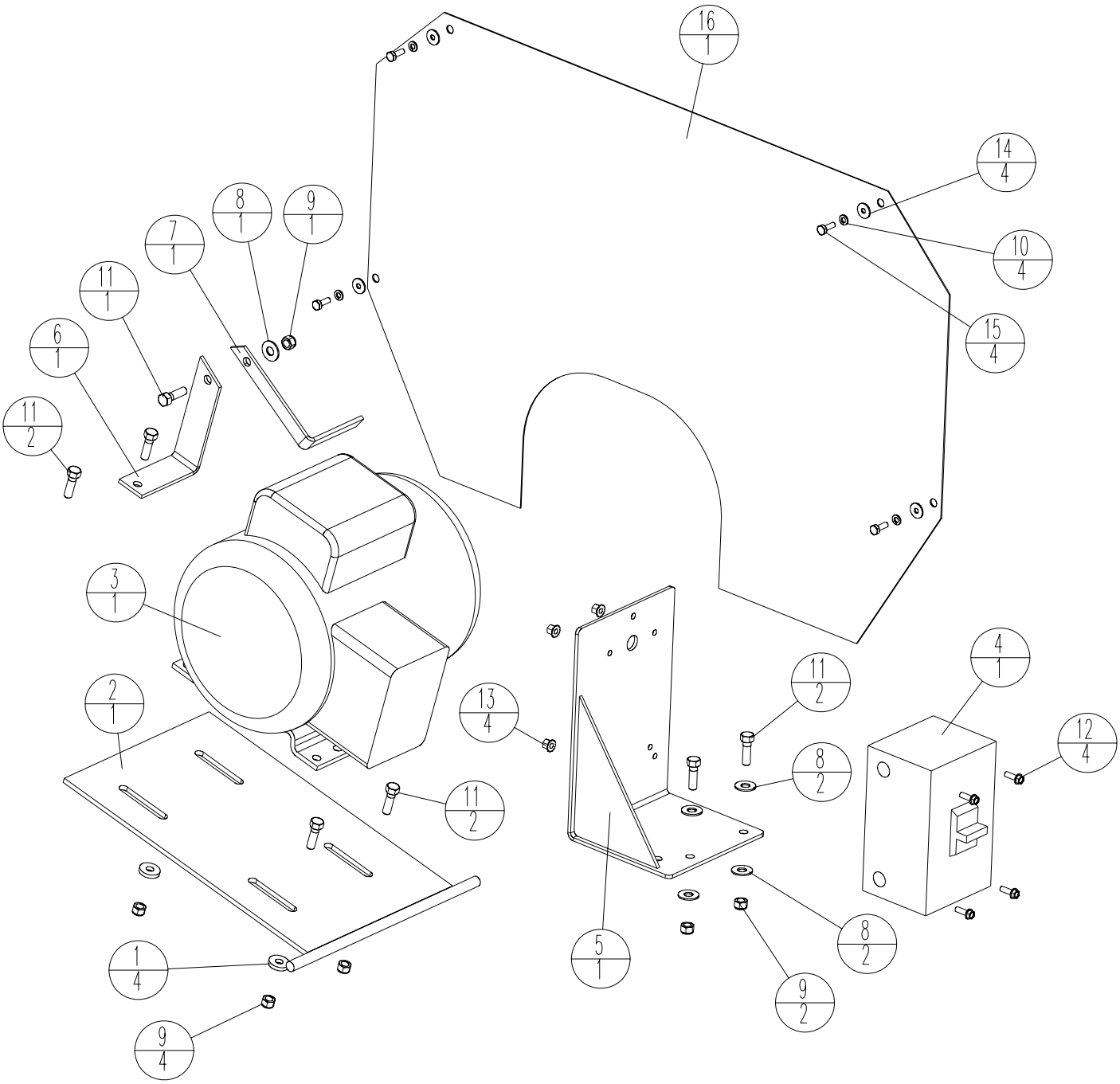
16 1
14 4
10 4
15 4
8 1
9 1
7 1
11 1
6 1
11 2
3 1
2 1
13 4
11 2
4 1
11 2
8 2
12 4
8 2
5 1
9 2
1 4
9 4

3 HP ELECTRIC MOTOR / INNER GUARD / STARTER BOX ASSEMBLY

Item	Part No.	Qty	Description
1	26325	4	Washer WSHR .375 ID x 1.00 OD x .187 ZN
2	27320-2	1	Weld Base Motor 3 hp Elec LgPM
3	30014	1	Motor Elec 3 hp 1725 RPM 1PH 230V
4	48535	1	Starter Manual Nema 1 3 hp 230V 1PH
5	50112-2	1	Weld Bracket Starter
6	50226-2	1	Guide Belt Stationary Elec
7	50227-2	1	Guide Belt Moveable Elec
8	80043	5	Washer WSHR WROT 3/8 ZN
9	80056	7	Nut NUTNY 3/8-16 ZN
10	80116	4	Washer WSHRL ¼ Med Split ZN
11*	80145	7	Screw HHCS 3/8-16 x 1-1/4 GR5 ZN
12*	80153	4	Screw HWHST ¼-20 x ¾ ZN
13	80236	4	Nut NUTKP ¼-20 ZN
14	80347	4	Washer WSHR WROT ¼ ZN
15	80434	4	Screw HHCS ¼-20 x 3/4 GR5 ZN
16	57689BD-2	1	Panel 3 hp Elect Extreme Duty LgPM

* Loctite 262

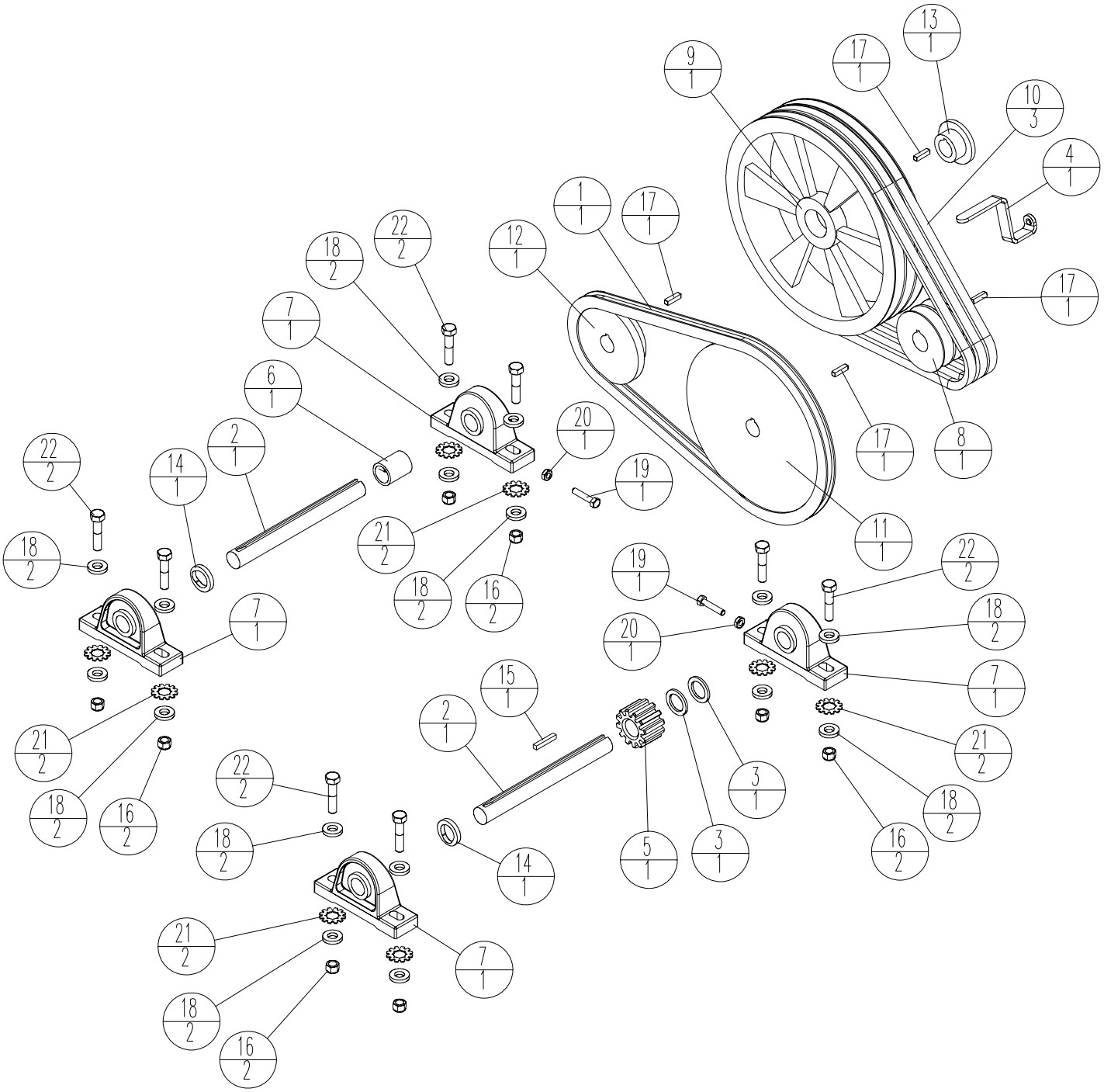

13 1
9 1
17 1
10 3
4 1
1 1
17 1
12 1
22 2
18 2
7 1
17 1
6 1
20 1
2 1
22 2
14 1
19 1
17 1
8 1
21 2
11 1
18 2
18 2
16 2
19 1
22 2
7 1
20 1
18 2
15 1
7 1
2 1
21 2
21 2
22 2
3 1
18 2
18 2
16 2
5 1
3 1
14 1
16 2
21 2
7 1
18 2
16 2

3 HP ELECTRIC DRIVE COMPONENTS ASSEMBLY

Item	Part No.	Qty	Description
1	21185	1	Set Chain RC60 62 Pitches
2	22509	2	Shaft Assembly
3	24622	2	Washer WSHR 1-1/32 ID x 1-1/2 OD x 1/8
4	26199-2	1	Guide Belt
5	23121	1	Kit Pinion
6	29138	1	Spacer
7	32209	4	Bearing Pillowblock 1.00
8	34517	1	Sheave 3BK34 x 1-1/8
9	34522	1	Sheave 3BK90 x 1
10	34624	3	V-Belt B45
11	34777	1	Sprocket 60B40 x 1 in Bore
12	34932	1	Sprocket 60B18 x 1 in Bore
13	35471	1	Bushing H-1
14	38122	2	Washer Retainer Pin
15	8006 1	1	Key Sq ¼ x 1.50 Class 1 Pln
16	80079	8	Nut NUTNY 7/16-14 ZN
17	80100	4	Key Sq ¼ x 1 Class 1 Pln
18	80125	16	Washer WSHR 17/32 x 1-1/16 x 3/16 ZN
19	80164	2	Bolt HHTB 5/16-18 x 1-1/2 GR5 ZN
20	80244	2	Nut NUTFXJ 5/16-18 ZN
21	80358	8	Washer WSHRLT INT/EXT 3/8
22*	80392	8	Screw HHCS 7/16-14 x 2 GR2 ZN

* Loctite 262